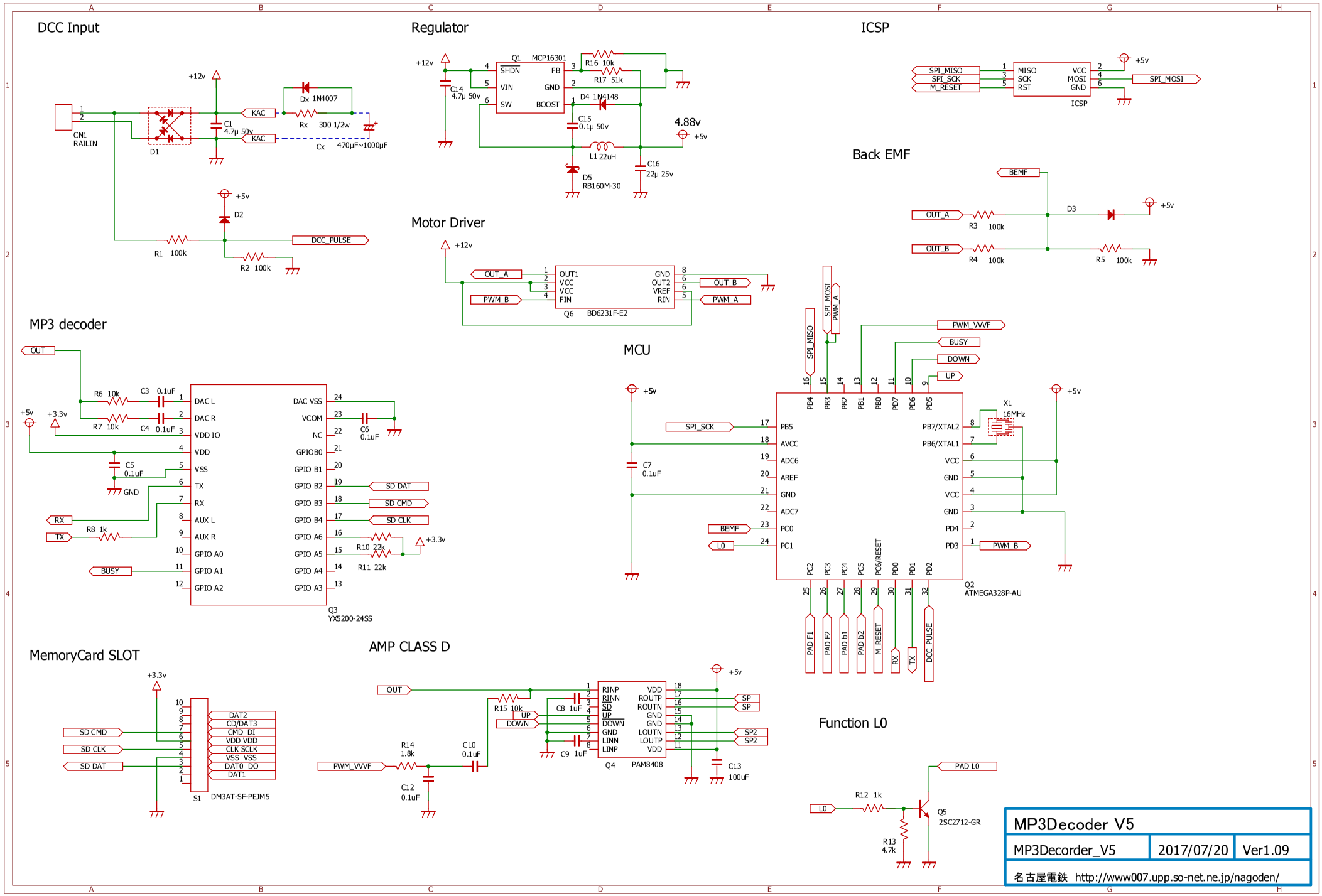
DCC Input
CN1
RAILIN
D1
+12v
C1
4.7μ 50v
KAC
KAC
Dx 1N4007
Rx 300 1/2w
Cx 470μF~1000μF
+5v
D2
R1 100k
R2 100k
DCC_PULSE
Regulator
+12v
C14
4.7μ 50v
Q1 MCP16301
SHDN
VIN
SW
FB
GND
BOOST
R16 10k
R17 51k
D4 1N4148
C15
0.1μ 50v
L1 22uH
D5
RB160M-30
C16
22μ 25v
4.88v
+5v
ICSP
SPI_MISO
SPI_SCK
M_RESET
MISO
SCK
RST
VCC
MOSI
GND
ICSP
+5v
SPI_MOSI
Back EMF
BEMF
OUT_A
R3 100k
D3
+5v
OUT_B
R4 100k
R5 100k
Motor Driver
+12v
OUT_A
PWM_B
OUT1
VCC
VCC
FIN
GND
OUT2
VREF
RIN
OUT_B
PWM_A
Q6 BD6231F-E2
MP3 decoder
OUT
+5v
+3.3v
R6 10k
C3 0.1uF
R7 10k
C4 0.1uF
C5
0.1uF
GND
RX
TX
R8 1k
BUSY
DAC L
DAC R
VDD IO
VDD
VSS
TX
RX
AUX L
AUX R
GPIO A0
GPIO A1
GPIO A2
DAC VSS
VCOM
NC
GPIOB0
GPIO B1
GPIO B2
GPIO B3
GPIO B4
GPIO A6
GPIO A5
GPIO A4
GPIO A3
C6
0.1uF
SD DAT
SD CMD
SD CLK
R10 22k
R11 22k
+3.3v
Q3
YX5200-24SS
MCU
+5v
C7
0.1uF
SPI_SCK
BEMF
L0
SPI_MISO
SPI_MOSI
PWM_A
PWM_VVVF
BUSY
DOWN
UP
PB4
PB3
PB2
PB1
PB0
PD7
PD6
PD5
PB5
AVCC
ADC6
AREF
GND
ADC7
PC0
PC1
PB7/XTAL2
PB6/XTAL1
VCC
GND
VCC
GND
PD4
PD3
X1
16MHz
PWM_B
PC2
PC3
PC4
PC5
PC6/RESET
PD0
PD1
PD2
PAD F1
PAD F2
PAD b1
PAD b2
M_RESET
RX
TX
DCC_PULSE
Q2
ATMEGA328P-AU
MemoryCard SLOT
+3.3v
SD CMD
SD CLK
SD DAT
DAT2
CD/DAT3
CMD DI
VDD VDD
CLK SCLK
VSS VSS
DAT0 DO
DAT1
S1 DM3AT-SF-PEJM5
AMP CLASS D
OUT
R15 10k
UP
DOWN
C8 1uF
C9 1uF
R14
1.8k
C10
0.1uF
PWM_VVVF
C12
0.1uF
RINP
RINN
SD
UP
DOWN
GND
LINN
LINP
VDD
ROUTP
ROUTN
GND
GND
LOUTN
LOUTP
VDD
SP
SP
SP2
SP2
Q4 PAM8408
+5v
C13
100uF
Function L0
PAD L0
L0
R12 1k
R13
4.7k
Q5
2SC2712-GR
MP3Decoder V5
MP3Decorder_V5
2017/07/20
Ver1.09
名古屋電鉄 http://www007.upp.so-net.ne.jp/nagoden/